FOREWORD

7KDQN\RXIRUSXUFKDVLQJVKHSDSHUOHVVUHFRUGHU

7KH XVHU¶V PDQXDO FRQWDLQV XVHXO LQIRUPDWRQ DERXW VKH IXQFWRQVRI VKHLQWUXPHQWLQWDOODWRQ ZLULQJ RSHUDWRQSURFHGXUHV DQG WURXEOHVKRRWLQJ 7R HQVXUH FRUUHFWXVH SOHDVH UHDG VKLV PDQXDO VKRURXJKO EHIRUH RSHUDWRQ . HHS VKLV PDQXDOLQ D VDIH SODFH IRU TXLFN UHIHUHQFHLQVKHHYHQWDTXHWWRQDULVHV

Notes

- 7KHFRQWHQWVRI VKLV PDQXDODUH VXEMHFWWR FKDQJH ZLWKRXWSULRU QRWLFHDVDUHVXOWRI FRQWLQXLQJ LP SURYHPHQWVWR VKHLQWUXPHQW¶V SHUIRUPDQFHDQGIXQFWRQV
- (YHU\ HIRUWKDVEHHQ PDGHLQ VKHSUHSDUDWRQRI VKLV PDQXDOWR HQVXUH VKH DFFXUDF\ RI LWV FRQWHQWV +RZHYHU VKRXOG\RX KDYH DQ\ TXHWWRQVRUILQGDQ\ HUURUV SOHDVHFRQWDFWXV
- &RS\LQJ RU UHSURGXFLQJ DOORU DQ\ SDUWRI VKH FRQWHQWV RI VKLV PDQXDOZLWKRXWRXUSHUPLWWLRQLVVWULFWOV SURKLELWHG

Revisions

MR80V09C16X

SAFETY PRECAUTIONS

0 DNH VXUH WR FRP SO\ ZLWK WKH IROORZLQJ VDIHW\ SUHFDXWLRQV ,I WKH LQVWUXP HQWLV XVHG LQ D P DQQHU QRW VSHFLILHG LQ WKLV P DQXDO WKH SURWHFWLRQ SURYLGHG E\ WKH LQVWUXP HQWP D\ EH LP SDLUHG : HDVXP H QR OLDELOLW\ IRU WKH FXVWRP HU¶V IDLOXUH WR FRP SO\ ZLWK WKHVH UHTXLUHP HQWV

WARNING

- **Power Supply**

%HIRUH FRQQHFWLQJ WKH SRZHU FRUG HQVXUH WKDW WKH SRZHU VXSSO\ YROWDJH P DWFKHV WKH YROWDJH UDWLQJ IRU WKH LQVWUXP HQW

- **Protective Grounding**

0 DNH VXUH WR FRQQHFW WKH SURWHFWLYH JURXQGLQJ WR SUHYHQW HOHFWULF VKRFN EHIRUH WXUQLQJ 21 WKH SRZHU

- **Necessity of Protective Grounding**

1HYHU FXWRII WKH LQWHUQDO RU H[WHUQDO SURWHFWLYH JURXQGLQJ ZLUH RU GLVFRQQHFW WKH ZLULQJ RI WKH SURWHFWLYH JURXQGLQJ WHUP LQDO' RLQJ VR SRVHVD SRWHQWLDO VKRFN KD]DUG

- **Defect of Protective Grounding**

' R QRW RSHUDWH WKH LQVWUXP HQW ZKHQ WKH SURWHFWLYH JURXQGLQJ RU WKH IXVH P LJKW EH GHIHFWLYH $OO P DNH VXUH WR FKHFN WKHP EHIRUH RSHUDWLQ

- **Do not operate in explosive atmosphere**

' R QRW RSHUDWH WKH LQVWUXP HQW LQ WKH SUHVHQFH RI IODP P DEOH GXVWV RU YDSRUV 2SHUDWLQ RI DQ\ HOHFWULFDO LQVWUXP HQW LQ VXFK DQ HQYLURQP HQW FRQVWLWXWHV D VDIHW\ KD]DUG

- **Do not remove covers**

6RPHDUHDVLQVLGHWKHLQWKPHQWKDYHKLJKYROWDJHV'RQRWUHPRYH WKHFRYHULI WKHSRZHUVXSSO\ LVFRQQHFWHG 7KHFRYHUVKRXOGEH UHPRYHGE\ RXUTXDOLILHGSHUVRQQHORQO\

- **External Connection**

&RQQHFWWKHSURWHFWLYHJURXQGLQJ EHRUHFRQQHFWLQJ WRWKHLWP XQGHU P HDVXUHP HQWRUFRQWURO XQLW

- **Damage to the protection**

8VLQJ WKHLQWKPHQWLQ DP DQQHUQRWVSHFLILHG LQ WKLV P DQXDOP D\ GDP DJHWKHLQWKPHQW\SURWHFWLRQ

CONTENTS OF THE PACKAGE

8 QSDFN VKH ER[DQG FKHFN VKH FRQWQWV EH RUH RSHUDWQJ VKH SDSHUOHVV UHFRUGHU ,I VRP HRI VKH FRQWQWV DUH QRWFRUUHFWRUP LVWLQJ RUVKHUH LV DQ\ SK\ VLFDOGDP DJH FRQWDFWXV RUVKH GHDOHUZ KLFK \ RX SXUFKDVHG LW

Standard Accessories

7 KH IROORZ LQJ VWDQGDUG DFFHVVRULHV DUH VXSSOLHG Z LWK VKH LQWWKP HQW 0 DNH VXUH VKDWDOOLWP V DUH SUHVHQWDQG XQGDP DJHG

1 R	1 DP H	8 QLW	4 7<	1 2 7(
	3 DSHUOHVV UHFRUG	SFV		
	8 VHU¶V 0 DQXDO	%RRN		
	0 RXQWQ EUDFN IW/ Z LWK VFUHZ V	SFV		
	$ SSOLFDWRQ	VHW		
	6 WDQGDUG 6 RIWZ DUH (&')	VHW		
	8 GLVN	SFV		RSWRQDO
	5 6 & OLQHV	SFV		RSWRQDO
	5 6 & FRQYHUWP RGXOD	SFV		RSWRQDO
	0 LFUR SULQWU (DFFHVVRU)	SFV		RSWRQDO

CONTENTS

CHAPTER 1 TECHNICAL INDEX 7
1.1 INPUT FUNCTION.....7
1.2 DISPLAY AND STORAGE FUNCTION.....8
1.3 OUTPUT FUNCTION (OPTION).....9
1.4 24VDC TRANSMITTER POWER SUPPLY OUTPUT (OPTION).....9
1.5 COMMUNICATION FUNCTION (OPTION).....10

CHANPTER 2 INSTALLATION AND WIRING.....11

2.1 PRECAUTIONS OF USE OF THE INSTRUMENT.....11
2.2 INSTALLING INSTRUMENT.....12
2.3 INPUT/OUTPUT SIGNAL WIRING.....14
2.4 RELAY OUTPUT WIRING (OPTION).....17
2.5 POWER WIRING.....18
2.6 24VDC TRANSMITTER POWER SUPPLY WIRING (OPTION)....20
2.7 RS232C/RS485 COMMUNICATION WIRING.....22

CHAPTER 3 KEYBOARD FUNCTION AND OPERATION 23

3.1 NAMES OF PARTS AND FUNCTIONS.....23
3.2 USING THE EXTERNAL THE STORAGE MEDIUM.....23
3.3 RUN MODE.....25
3.4 OVERVIEW SCREEN.....26
3.5 BAR GRAPH DISPLAY.....27
3.6 REAL-TIME TREND CURVE.....28
3.7 ALARM INFORMATION.....29
3.8 HISTORY CRUVE.....30
3.9 POWER-DOWN INFORMATION.....31

CHAPTER 4 SETTING SYSTEM PARAMETERS.....32

4.1 CONFIGURE.....32

4.2 SYSTEM CONFIGURATION 33
4.3 DISPLAY CONFIGURATION.....35
4.4 INPUT CONFIGURATION.....36
4.5 ANALOG OUTPUT CONFIGURATION.....39
4.6 BACKUP DATA.....40
4.7 PRINT DATA.....41
CHAPTER 5 OTHER STANDARD FUNCTIONS.....42

&+$37(5 7(&+1,&$/ ,1'(;

1.1 INPUT FUNCTION

- **Number of measurement channels/Scan interval**

7KHQXPEHURI PHDVXUHPHQWFKDQQHOVFDQEHVHOHFWHGIURP WR
7KHVFDQLQWHUYDORI PHDVXUHPHQWVVHWWR VHFRQG

- **Input type and computation**

<RX FDQ VHOHFWWKH LQSXWWSH RI D PHDVXUHPHQWFKDQQHOIURP '&
YROWDJH '&FXUUHQWWKHUPRFRXSOH UHVLVWDQFH IUHTXHQF\ VJQDO<RX
FDQ DOVR SHUFRP FRP SXWDWLRQ RQ WKH PHDVXUHG GDWD VXFK DV WKH
³VTXDUHURRW
)RU SURFHGXUH UHDGLQG VR VHWWQJ WKH GLIHUHQWP RGHV VHH VHFWLRQ
『,QSXWFRQLJXUDWLRQ

,QSXWPRGH	0HDVXULQJ UDQJH		
'&FXUUHQW	P$	P$	P$
'&YROWDJH	P9	P9	9 9
5HVLVWDQFH	Ω		
7KHUPRFRXSOH	6%. 7(-51)) :5H		:5H
5HVLVWDQFH	37 &X *	&X	%$ %$

1.2 DISPLAY AND STORAGE FUNCTION

- **Common items related to the Display**
  - **LCD and the Screen Configuration**

7KH ,QWWXP HQWKDV D ´ 7) 7 FRORU / &' E\ GRW UHVROXWRQ

  - **Status display section**

' LVSODV VWKH GDWD DQG WP H 8 6% FRQWDFW RSWRQ F\ FOH GLVSODV FRQGLWRQ DQG VR RQ) RU GHWDLOV VHH VHFWRQ ([SODQDWRQ RI WKH 6WDWXV' LVSODV 6HFWRQ

  - **Data Display Section**

' LVSODV V WKH RSHUDWRQ VFUHHQ VXFK DV WKH WHQG GLJLWDO DODUP VXP P DU DQG SULQWRSHUDWRQ

' LVSODV VWKH VHWXS VFUHHQ I RU WKH VHWWQJ DQG EDVLF VHWWQJ P RGHV Z KHQ WKH LQWWXP HQWLV EHLQJ FRQ LJ XUHG

  - **Operation screen**

7KHP RGHLV HQWHUHG Z KHQ WKH SRZ HULV WXUQHG 2 1

' LVSODV V YDULRXV RSHUDWRQ VFUHHQV VXFK DV GLJLWDO WHQG DODUP VXP P DU KLWRULFDO WHQG GDWD SULQW RSWRQ DQG GDWD EDFNXS GLVSODV RSWRQ DFFXP XODWYH UHSRUW RSWRQ

  - **Setting Mode**

7KH YDULRXV I XQFWRQV RI WKH LQWWXP HQWDUH FRQ LJ XUHG XVLQJ WKH VHWWQJ P RGH

7KLV VFUHHQ LV XVHG WR VHW WKH VLJQDO WVSHV LQSXWUDQJH I LOWHU DODUP V\ VWHP WP H HWF

- **Storage function**

External storage media and internal memory

7KH FDSDFLW RI VKH LQWUQDO P HP RU I RU DFTXLULQJ GLVSOD GDWD DUH
0 %IODVK P HP RU RSWRQ DQG . %65$0
9DULRXV GDWD FDQ EH VDYHG VR VKH 8 6% GLVN 7KH FDSDFLW LV IURP * %
VR * %

1.3 OUTPUT FUNCTION (OPTION)

Transmitter output

0 HDVXUHG DQG FRP SXWHG GDWD FDQ EH WUDQVP LWWHG DQG RXVSXWDV DQ
DQDORJ VLJQDO
7KH VLJQDOWSH RI WUDQVP LWWHURXVSXWLV VR P$
7KH LQWUKP HQWSURYLGH0 $; RXVSXWFKDQQHOV
7KH P D[LP XP ORDG DOORZ HG VR HDFK FKDQQHOLV
) RUGHWDLOV VHH VHFWRQ 2 XVSXWFRQILJXUDWRQ

1.4 24VDC TRANSMITTER POWER SUPPLY OUTPUT (OPTION)

3URYLGHV 9' & SRZ HUVR WUDQVP LWWHUV
7KH LQWUKP HQWSURYLGHV 0 $; SRZ HU VXSSO FKDQQHOV 7KH
P D[LP XP FXUUHQWWKDWFDQ EH SURYLGHG VR HDFK FKDQQHOLV P$

1.5 COMMUNICATION FUNCTION (OPTION)

7KH LQWUKP HQWFDQ FRP P XQLFDWG Z LWK VHULDO LQWUDFH 56 & RU 56 DQG DOR FDQ SULQWGDWD E\ P LFUR SULQWU

- **RS232C/RS485 Communication**

,QWUKP HQWFDQ EH FRQQHFWG VR FRP SXWU E\ FDEOH QHWZ RUN QHWZ RUN、 UDGLR * 356 DQG0 RGHP
56 & RU 56 FDQ EH VHOHFWG Z KHQ VKH LQWUKP HQW FRP P XQLFDWV Z LWK 3& E\ XVLQJ VKH0 2' %86 578 SURVRFRO
7KH 6VDQGDUG VRI WZ DUH DOR SURYLGHG VR XVHUV <RX FDQ XVH LWWR FRQQHFWKH FRQI LJ XUDWRQ VRI WZ DUH

- **Micro Printer**

7KH LQWUKP HQWFDQ EH FRQQHFWG FRQWDFW Z LWK VKH P LFUR SULQWU <RX FDQ SULQWKLWRU GDWD DQG KLWRU FXUYH P DQXDOO
3ULQWGLVSOD GDWD Z LOOEH DXWRP DWF

&+$37(5 ,167$//$7,21$1' : ,5,1*

2.1 PRECAUTIONS OF USE OF THE INSTRUMENT

5HDG VKH IROORZLQJ SUHFDXWRQV EHIRUH XVLQJ VKH LQWUKPHQWDQG VKH H[VWUQDOWRUDJHPHGLXP

Handling precautions

- %HFDUHXOZKHQFOHDQLQJ VKHLQWUKPHQWHVSHFLDOOD DQ SODWLF SDUW : KHQFOHDQLQJ ZLSHZLWK DGU VRIWFORWK ' RQRWXVHFKHPLFDOV VXFK DV EHQ]HQHRUWKLQQHUVLQFHVKHVHPD FDXVHGLVFRORUDWRQDQGGHIRUPDWRQ
- . HHSHOHFWULFDOO FKDUJHGREMHFWVDZD IURP VKHLQWUKPHQWDV VKLVPD FDXVHPDOXQFWRQ
- ' RQRWDSSOV VKRFNVR VKHLQWUKPHQW
- ,I VKHUHDUHDQ V\P SWRPVRI WURXEOHVXFK DV VWUDQJHRGRUVRU VPRNHFRPLQJ IURP VKHLQWUKPHQWLPPHGLDWOV VXUQ2)) VKHSRZHU DQGXQSOXJ VKHSRZHUFRUG7KHQFRQWDFWVKHGHDOHURURXUFRPSDQ

2.2 INSTALLING INSTRUMENT

- **Instrument dimension**

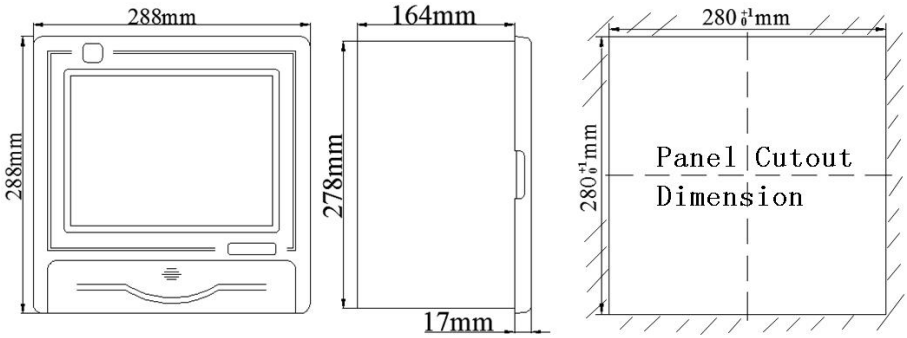

- **Well-ventilated location**

7R SUHYHQWRYHUKHDWLQJ LQWDOO VKH LQWUKP HQWLQ D Z HOOYHQWLODWHG OBFDWLRQ

- **Minimum mechanical vibrations**

&KRRVH DQ LQWDOODWLRQ OBFDWLRQ Z LWK VKH P LQLP XP P HFKDQLFDO YLEUDWLRQ

NOTE

- &RQGHQVDWLRQ P D\ RFFXUL VKH LQWUKP HQWLV P RYHG VR DQR VKH USODFH Z KHUH ERWK VKH DP ELHQWWP SHUDWXUHV DQG KXP LGLW DUH KLJKHU RUL VKH VWP SHUDWXUH FKDQJHV UDSLGO ,Q VKLV FDVH OHWVKH LQWUKP HQWDGWXVWWR VKH QHZ HQYLURQP HQW/RUDWOHDWWRQH KRXUEH RUH XVLQJ LW
- 7KHOLHWP HR VKH/ &' P D\ EH VKRUWHG L VKH LQWUKP HQWLV XVHG LQ DKLJK VWP SHUDWXUH HQYLURQP HQWRYHUDORQJ SHULRG R VWP H

- **Do not install the instrument in the following places**
  - **In direct sunlight or near heat sources**

    ,QVWDOO WKH LQVWUXPHQW LQ D SODFH ZLWK VP DOO WHP SHUDWXUH IOXFWXDWLRQV QHDU URRP WHP SHUDWXUH ℃ 3ODFLQJ WKH LQVWUXPHQW GLUHFWO\ VXQOLJKW RU QHDU KHDW VRXUFHV FDQ FDXVH DGYHUVH HIHFWV RQ WKH LQVWUXPHQW
  - **Where an excessive amount of soot, steam, moisture, dust, or corrosive gases are present**

    6RRW WHP P RLVWXUH GXVW DQG FRUURVLYH JDVHV ZLOO DGYHUVHO DIIHFW WKH LQVWUXPHQW$YRLG VXFK ORFDWLRQV
  - **Near strong magnetic field sources**

    ' RQRW LQVWDOO P DJQHWV RU LQVWUXPHQWV WKDW SURGXFH HOHFWURP DJQHWF ILHOGV FORVH WR WKH LQVWUXPHQW 2 SHUDWLQJ WKH LQVWUXPHQW LQ VWURQJ P DJQHWF ILHOGV FDQ FDXVH HUURUV LQ WKH P HDVXUHP HQW
  - **Bad angle for viewing the screen**

    %HFDXVH WKH LQVWUXPHQW XVHV D³ODTXLG FU VWDO GLVSOD\ / &' ´ LWV GLIILFXOW\ WR YLHZ WKH GLVSOD\ IURP DQ[WHP HDQJOH 3OHDVH LQVWDOO WKH LQVWUXPHQW WR WKDW WKH P RQLWRU FDQ EH YLHZHG IURP WKH IURQW

2.3 INPUT/OUTPUT SIGNAL WIRING

- **Take the following precautions when wring the input/output signal cables**

CAUTION

,I D VWURQJ WHQVLRQ LV DSSOLHG WR WKH FDEOH ZLUHG WR WKH LQWXKP HQW WKH WHUP LQDOV RI WKH LQWXKP HQWDQG RU WKH FDEOH FDQ EH GDP DJHG ,Q RUGHU WR SUHYHQW WHQWHQVLRQ IURP EHLQJ DSSOLHG GLUHFWO RQ WKH WHUP LQDOV IDVWHQ DCC ZLUHQJ FDEOHV WR WKH UHDUH WKHP RXQWQJ SDQHO

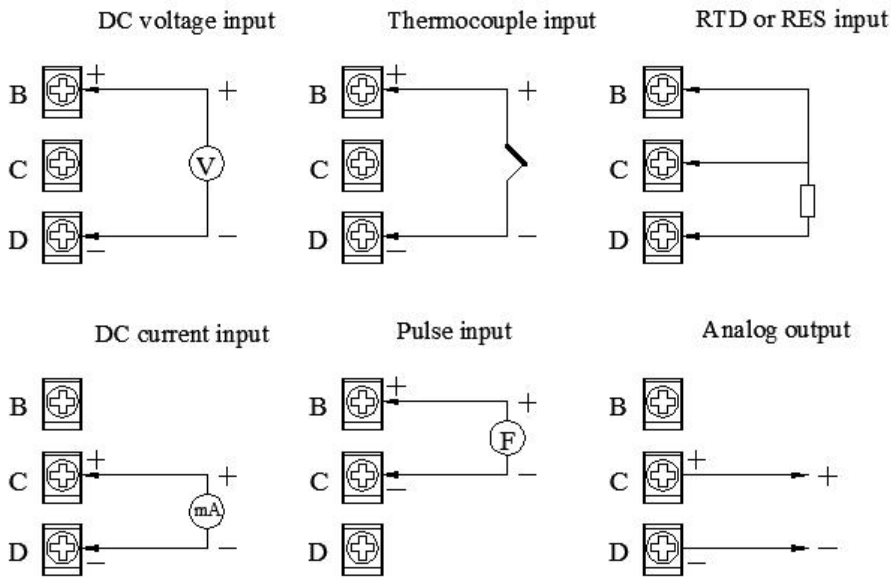

- **Take measures to prevent noise from entering the measurement circuit**

  - 0 RYH VKH P HDVXUHP HQWFLUFXLWDZ D\ IURP VKH SRZ HUFDEOH SRZ HUFLUFXLWDQG JURXQG FDEOH
  - ,WLVGHVLUDEOH VKDWVKH LVWP EHLQJ P HDVXUHG GRHVQRWJHQHUDWH QRLVH
  - + RZ HYHU LL VKLVLVXQDYRLGDEOH LVRODWHVKH P HDVXUHP HQW FLUFXLWURP VKH LVWP $ OVR JURXQG VKH LVWP EHLQJ P HDVXUHG
  - 6KLHOGHG Z LUHV VKRXOG EH XVHG VR P LQLP L] H QRLVH FDXVHG E\ HOHFWURVWDWF LQGXFWRQ &RQQHFWVKH VKLHOG VR VKH JURXQG VHUP LQDO RI VKH LQWWK P HQWDV QHFHVDU\ P DNH VXUH \ RX DUH QRWJURXQGLQJ DWWZ R SRLQW
  - 7R P LQLP L] H QRLVH FDXVHG E\ HOHFWURP DJQHWF LQGXFWRQ VZ LVWVKH P HDVXUHP HQWFLUFXLWZ LUHV DWVKRUWHTXDOLQWHYDOV
  - 0 DNH VXUH VR HDUWK JURXQG VKH SURWHFWYH JURXQG VHUP LQDO VKURXJK P LQLP XP UHVLWDQFH

- **When using internal reference junction compensation on the thermocouple input, take measures to stabilize the temperature at the input terminal**

  - ' R QRWXVH VKLFN Z LUHV Z KLFK P D\ FDXVH ODUJH KHDW GLVWLSDWRQ FURW VHFWRQDO DUHD P P RU OHW LV UHFRP P HQGHG
  - 0 DNH VXUH VKDWVKH DP ELHQWWP SHUDWXUH UHP DLQV UHDVRQDEO VWDEOH / DUJH VWP SHUDWXUH IOXFWXDWRQV FDQ RFFXU LL D QHDUE\ IDQ VXUQV 2 1 RU 2))

- **Connecting the input wires in parallel with other devices can cause signal degradation, affecting all connected devices**

,I \ RX QHHG VRP DNHD SDUDOOHOFRQQHFWRQ VKHQ

- * URXQG VKHLQWUXP HQWVRV VKHVDP HSRLQW
- ' RQRWWXUQ 2 1 RU 2)) DQRVKHULQWUXP HQWGXULQJ RSHUDWRQ 7 KLVFDQ KDYH DGYHUVH HIHFWVRQ VKHRVKHULQWUXP HQW
- 5 7' FDQ QRWEHZ LUHG LQ SDUDOOHO
- &XUUHQWWLJ QDOFDQ QRWEHZ LUHG LQ SDUDOOHO

WARNING

✧ 7 RSUHYHQWHOHFWULF VKRFN HQVXUHVKHP DLQ SRZ HUVXSSO LVVXUQHG 2))

- **Input terminal position and wiring diagram**

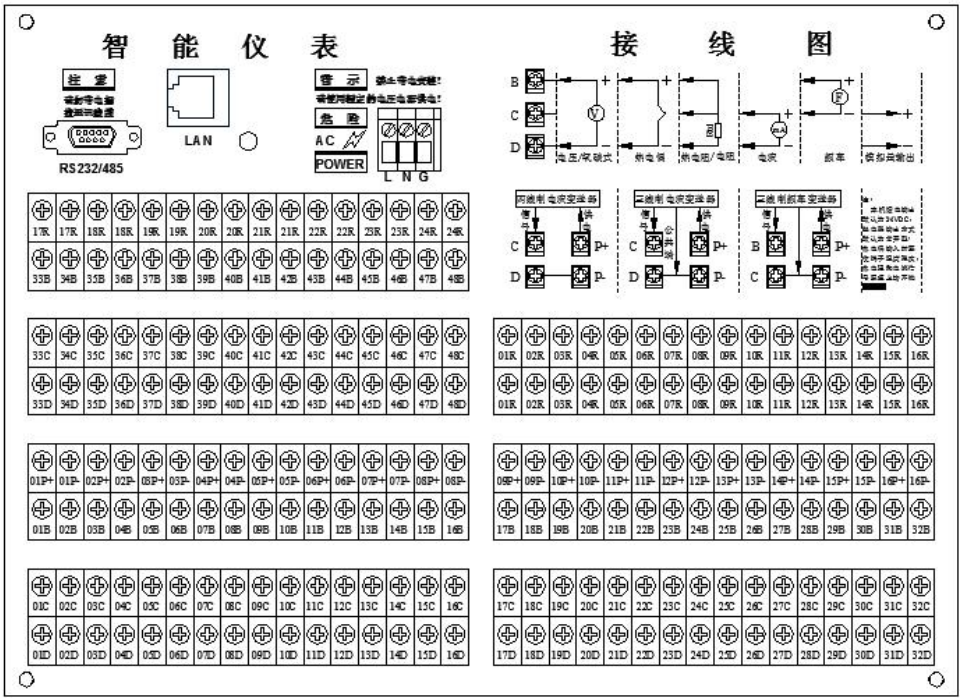

2.4 RELAY OUTPUT WIRING (OPTION)

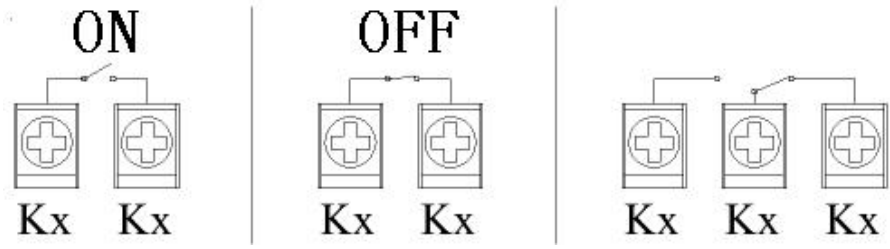

WARNING

- 7R SUHYHQWHOHFWULF VKRFN HQVXUH WKH P DLQ SRZ HUVXSSO LVVXUQHG2))
- ,I DYROWDJH RI P RUH WKDQ 9' & RU 9' & LV VR EH DSSOLHG VR WKH DODUP RXVSXWWHUP LQDO XVH ULQJ VRQJXH FULP S RQ OXJV Z LWK LQVXODWRQ VOHHYHV RQ DOO WHUP LQDOV VR SUHYHQWWKH Z LUHV IURP VOSSLQJ RXWZ KHQ WKH VFUHZ V EHFRP H ORRVH) XUWKHUP RUH XVH GRXEOH LQVXODWHG Z LUHV GLHOHFWULF VWUHQJWK RI 9$ & RUP RUH IRUWKH VLJQDOZ LUHV RQ Z KLFK DYROWDJH RI P RUH WKDQ 9$ & RU 9' & LV VR EH DSSOLHG) RUDOORWKHUZ LUHV XVH EDVLF LQVXODWHG Z LUHV GLHOHFWULF VWUHQJWK RI 9$ & 7R SUHYHQWHOHFWULF VKRFN DWDFK WKH WHUP LQDOFRYHUDI WHUZ LULQJ DQG P DNH VXUH QRWVR VRXFK WKH WHUP LQDOV

- **Wiring Procedure**
  - 7XUQ2)) WKH LQWWKP HQW
  - &RQQHFWWKH DODUP RXVSXWFDEOHV VR WKH WHUP LQDO
  - : KHQZ LULQJ LVFRP SOHWHG SRZ HU2 1
- **Contact Specifications**

Item	Specification
2 XVSXW	5 HOD\ WDQVI HUFRQWDFW HQHUJL] H GH HQHUJL] H VZ LWFK DEOH
2 XVSXW	9$ & $
FDSDFLW	9' & $

2.5 POWER WIRING

- **Precautions to be taken when wiring the power supply**

7R SUHYHQWHOHFWULF VKRFN DQG GDP DJH WR WKH LQWXUP HQWREVHUYH WKH IROORZLQJ ZDUQLQJV

WARNING

- 7R SUHYHQWHOHFWULF VKRFN HQVXUH WKHP DLQSRZHUVXSSOLVWXUQHG2))
- 7R SUHYHQWWKH SRWLELOLW\ RI ILUH XVH 9 39& LQVXODWG ZLUH $: * RUDQHTXLYDOHQWZLUHIRUSRZHUZLULQJ
- 0DNH VXUH WR HDUWK JURXQG WKH SURWHFWLYH HDUWK WUXP LQDO WKURXJK D JURXQGLQJ UHVLVWDQFHOHVVWKDQ EHRUHVWULQJ21 WKHSRZHU
- 8VH FUMP SRQ OXJV GHVLJQHG IRU PP VFUHZV IRUSRZHUDQG JURXQG ZLULQJ WUP LQDWRQ
- 0DNH VXUH WR SURYLGH D SRZHUZLWK GRXEOHSROH WSH RQ WKH SRZHL VXSSO ODQH LQ RUGHU WR HSDUDWH WKH LQWXUP HQWIURP WKH P DLQ SRZHL VXSSO 3XWDQ LQGLFDWRRQ WKLV VZLWK DV WKH EUHDNHURQ WKH SRZHL VXSSO ODQH IRU WKH LQWXUP HQW6ZLWK 6SHFLILFDWRQ 5DWG SRZHL FXUHQW$ RUP RUH
- &RQQHFWD IXVH EHWZHHQ $DQG $ WR WKHSRZHUODQH

- **Wiring Procedure**

  - 0DNHVXUHWKHSRZHULVRII
  - &RQQHFWWKHSRZHUVXSSO ZLUHV DQG WKH SURWHFWLYH JURXQG ZLUHWRWKHSRZHUWUP LQDOV
  - &RQQHFWWR WKHSRZHU

- **Power supply wiring terminal permutation**

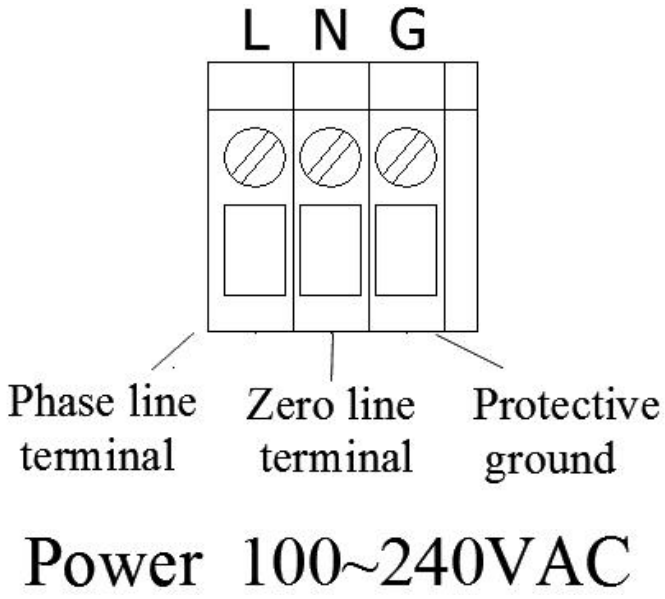

- **Specifications**

Item	Conditions		
,QSXWYROWDJH	9$&WR	9$&	
,QSXWIUHTXHQF\	+]	+]	

2.6 24VDC TRANSMITTER POWER SUPPLY WIRING (OPTION)

- **Transmitter power output**

&$87,21

- 1HYHU VKRUWFLUFXLWWKH SRZHU VXSSO WUP LQDOY RU DSSO DQ H[WHUQDO YROWDH RWKHUZLVHLWZ LOOGDP DJH WR WKHLQWUKP HQW

- **Wiring Diagram**

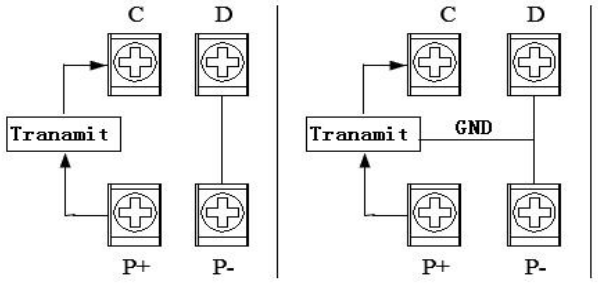

2-wire transmitter 3-wire transmitter

Transmitter power supply connection

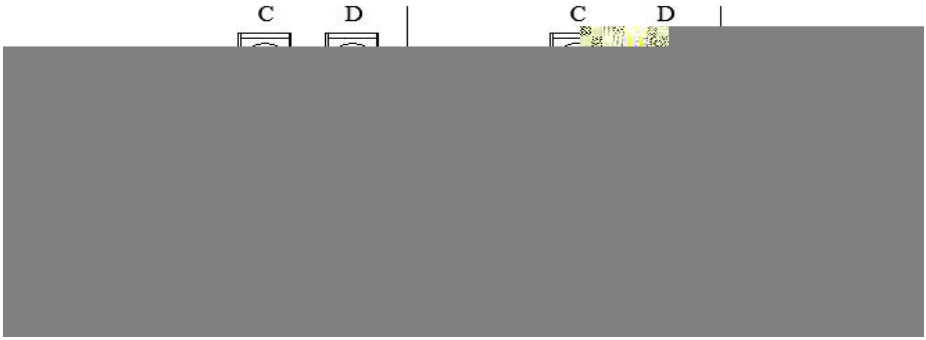

Connection Procedure

- 7XUQ2)) VKHSRZHU
- &RQQHFWVKHSRZHUFRUGVRVKHSRZHUFRQQHFVRURQVKHUHDU SDQHORI VKHLQWXPHQW
- : KHQZLULQJ LVFRPSOHWG SRZHU21

NOTE

7RDYRLGFRQQHFWRQIDLOXUH SOHDVHWJKWQVFUHZVVHULRXVO ZKLOHZLULQJ

Specifications

Item	Conditions
2XVSXWYRODJH	9'&～ 9'&(UDWHRXVSXWFXUUHQW
0D[LPXP RXVSXWFXUUHQW	P$'&

2.7 RS232C/RS485 COMMUNICATION WIRING

● Communication interface permutation

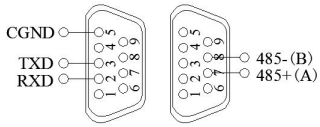

Communication interface

● RS485 connect mode

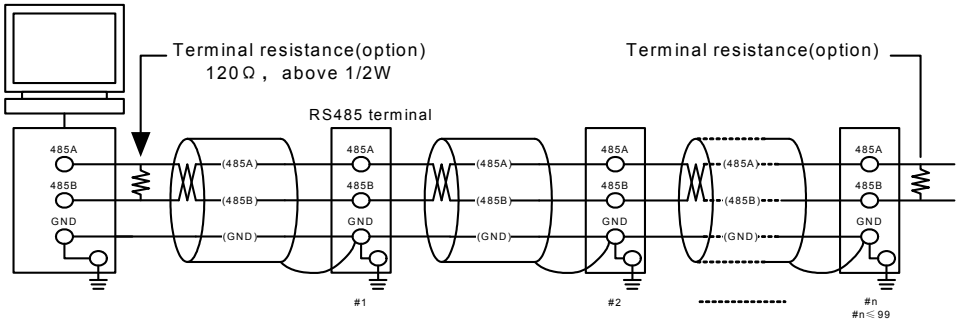

Don't connect terminal resistance between #1 and #n-1

● RS232C connect mode

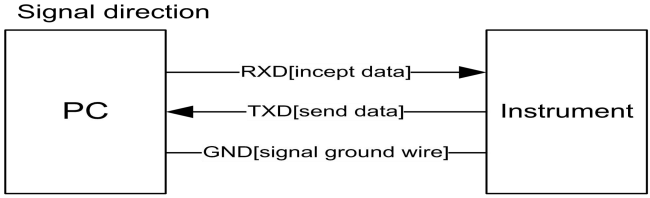

● Communication Specifications

Item	Specification
%DXGUDWH	

3.3 RUN MODE

Wiring Procedure

0 RGH 7\SH	' HVFULSWLRQ	3RVVLEOH2 SHUDWLRQV
2 SHUDWLRQ P RGH	7KLV P RGH LV XVHG IRU GDLO RSHUDWLRQ 7KLV P RGH LV HQWHUHG ZKHQ WKH SRZHULVWXUQHG21	0 RQLWRULQJ RSHUDWLRQ ' DWDFTXLVLWLRQ
6HWWLQJ P RGH	7KLV P RGH LV XVHG WR FRQILJXUH WKH LQWXKP HQV RSHUDWLRQ VXFK DV LQSXWDQJH DQGDDUP V 7KLV P RGH LV HQWHUHG E\ SUHVVLQJ WKH OHWWLJKWNH LQ	6HWWLQJ WKH RSHUDWLRQ 2 SHUDWLRQ UHODWHG WR WKH ILOH RQ WKH H[WHUQDO WRUDJH P HGLXP

VWHRSHUDWRQ PRGH
0 HDVXUHG GDWD FDQQRW EH
GLVSOD\HG LQ VWLVP RGH
2 SHUDWRQV VXFK DV
P HDVXUHP HQW DDDUP
GHWHFWRQ DQG GDWD
DFTXLVLWRQ DUHFRQWQXHG

3.4 OVERVIEW SCREEN

' LVSOD\ VWH P HDVXUHP HQWFRP SXWHG GDWD RI FKDQQHOV DWWKH VDP H WP H

- **Engineering value currently**

  ' LVSOD\ VWH HQJLQHHULQJ GDWD RI VWH FKDQQHO HQJLQHHULQJ

3.5 BAR GRAPH DISPLAY

- **Indications of each channel's alarm state**

) URP VRS VR GRZ Q + LJK KLJK DODUP KLJK DODUP OPZ DODUP OPZ OPZ DODUP UHGP HDQV DODUP

- **Bar chart**

  %DU FKDUWUXOHU KDV VKH OHQJVK RI JULGV DQG VKH OHQJVK RI ILOOQJ FRORUUHSUHVHQWSURSRUWRQLQSHUFHQW

- **Circulations tag**

  &LUFXODWRQ VDJ 7KH ELJ GLJLVDOGLVSOD RI HYHU FKDQQHOZ LOOEH GLVSOD HGZ LVK FLUFXODWRQ

  1 R GLVSOD 6VDWF SLFVXUHV DQG QR FLUFXODWRQ

3.6 REAL-TIME TREND CURVE

、 7UHQG FXUYH (DFK JULG P HDQV VKH OHQJWK VKH FXUYH LV UHDWHG ZLWK UHFRUGLQJ LQWHUYDO (DFK JULG WP H OHQJWK UHFRUGLQJ LQWHUYDO ×

、 6KRZ FRP ELQDWRQQXP EHUV

、 &KDQQHO1 XP EHUWDJ

、 &KDQQHOXQLWFDQEHVHW

、 7UHQGGLVSOD\ \(P ERO“ √ ” GLVSOD\ “ × ” KLGH

、 * ULG HWWP DWWVKHWP HDQGGDWDYDXH

、 5HDOWP H FXUYH RI FKDQQHO 0 RWWGLVSOD\ WUHQGV DWWKH VDP H VFUHQ

、 0 HDVXUHP HQWRI FKDQQHOFRP SXWHGDWD

、 6FDOH ' LVSOD\ SHUFHQWDJHRI WKHWUHQG

3.7 ALARM INFORMATION

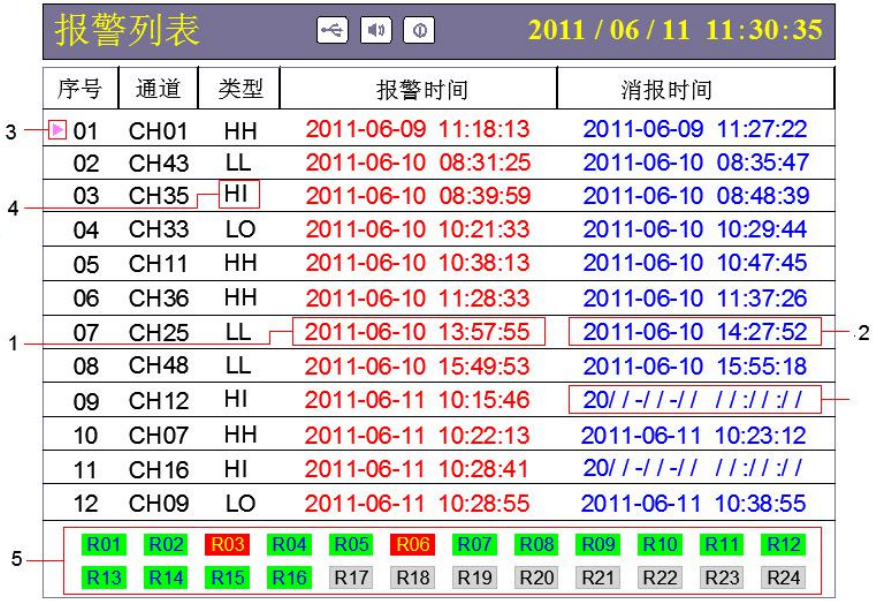

、 $ ODUP VWP H ' LVSOD\ HG VKH DODUP RFFXUVWP H

、 8 QGR DODUP VWP H ' LVSOD\ HG VKH DODUP XQGR VWP H

、 $ ODUP FKDQQHO

、 $ ODUP VWSH(++、 +,、 / 2、 / /)

、 5 HOD\ VWDWH ' LVSOD\ FXUUHQWUHOD\ RXVSXVWWDWH

5 HOD\ VWSH	1 RUP DOFSHQUHOD\	1 RUP DOFORVHGUHOD\
* UHHQ	2 SHQ	&ORVH
5 HG	&ORVH	2 SHQ

3.8 HISTORY CRUVE

、 7UHQG F\FOH (DFK JULG P HDQV VKH OHQJVK VKH F\FOH LV UHODWHG Z LVK UHFRUGLQJ LQWHUYDO (DFK JULG VWP H OHQJVK UHFRUGLQJ LQWHUYDO × =RRP P XOWSOH

、 6KRZ FRP ELQDWRQ QXP EHUV

、 &KDQQHO1 XP EHUVDJ

、 &KDQQHOXQLWFDQ EH VHW

、 7UHQG GLVSOD\ V\P EROV “√” GLVSOD\ “×” KLGH

、 * ULG (VWP DWH VKH VWP H DQG GDWD YDOXH

、 + LVWRU\ FXUYH RI FKDQQHO0 RVWGLVSOD\ WUHQGV DWVKH VDP H VFUHHQ

、 6HDUFKLQJ VWP H 8 VHV >OH V@DQG >ULJ KV@VR P RYH FXUVRU VR VHWVKH GDWD VWP H VR D GHVLUHG SRLQWE\ XVLQJ >8 S@DQG > RZ Q@2 QFH >(QWHU@ LVSUHVVHG VKH FXUYH Z LOOEH P RYHG VR VKH ILL[HG SRLQWDX VRP DWFDOO

、 + LVWRULFDO GDWD RI FKDQQHOV 6KRZ VKH GDWD RI FKDQQHOV VKDWVKH 0 HWHU UHFRUGHG

、 6FDOH ' LVSOD\ SHUFHQWDJH RI VKH WUHQG

3.9 POWER-DOWN INFORMATION

、 (YHU HYHQWUHFRUGVHULDOQXPEHU
、 3RZHUGRZQWLPH 3RZHUGRZQWLPHRI WKHLQWXKPHQW
、 3RZHURQWLPH 3RZHURQWLPHRI WKHLQWXKPHQW

&+$37(5 6(77,1* 6<67(0 3$5$0(7(56

4.1 CONFIGURE

- **Procedure**

3UHVV>(QWHU@DQG>0HQX@FRQFXUUHQWOV KRQGLQJ RU VHFRQGV<RX HQWHU
LQWR VKHFRQILJXUDWRQSDJH 8VH>$UURZ@DQG>(QWHU@NH HQWHUVKHSDVVZRUG

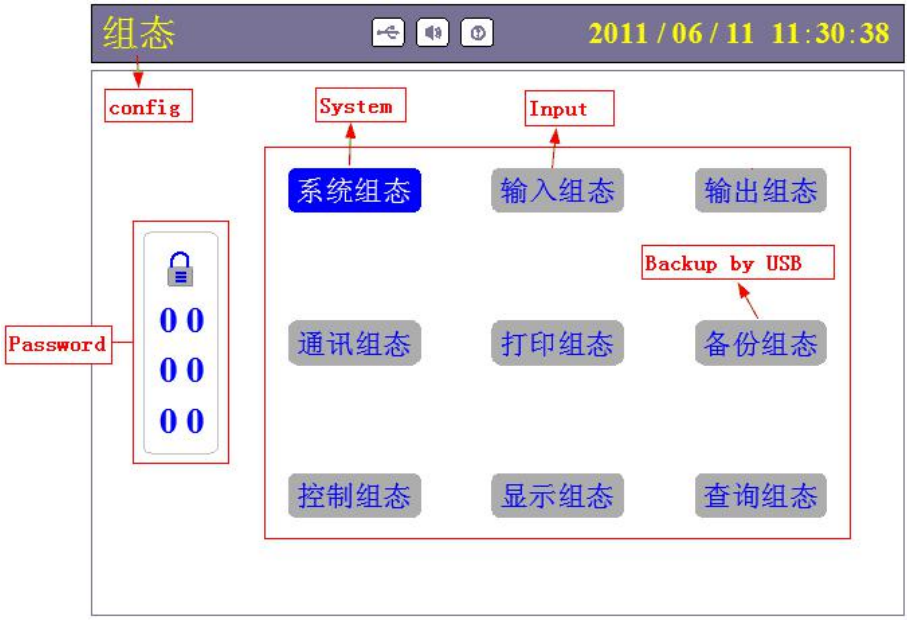

NOTE

,WLV D XQLTXH SDVVZRUG VRR P RGLI\ FRQILJXUDWRQ SDUDP HWHUV 2QFH LWLV
IRUJRWWHQ LWFDQQRWEH P RGLILHG VKRVH SDUDP HWHUV
7KH LQLWDOSDVVZRUG LV DIWHUSXUFKDVLQJ LQWUKP HQWLWLV EHWWHU
IRUXVHUVVRR DP HQG LWDVVRRQ DVSRVVLEOH DQG SUHVHUYH LWSURSHUO

4.2 SYSTEM CONFIGURATION

- **Setting time**

6 HWWQJ VKHIFXUUHQWGDWHDQGWLP HRI VKHLQWUXP HQW

NOTE

$ IVHUVHWWQJ V\ VWHP GDWD\WP H VKRVH KLVWRULFDOGDWD VWRUHG LQ LQWUXP HQWLV

LQYDOLG

1 HZ DQGHIHFWLYHGDWDEHJLQVDIVHUVHWWQJ V\ VWHP GDWD\WP H

%HIRUHVHWWQJ V\ VWHP GDWD\WP H SOHDVHEDFNXS KLVWRU\ GDWD

- **User password**

8 VHUSDVVZ RUG DXWKRULW\ VHW

- **Record interval**

  6HOHFW VHF
  7KH LQWHUPHGLDWH VDPSOLQJ SHULRGLV VHFRQG VR WKHP LQLP XP
  UHFRUGLQJ LQWHUYDOV VHFRQG
  ,QFUHDVLQJ WKH UHFRUGVLQJ LQWHUYDOFDQH[WHQG SURGRQJ WKHOHQJWK RI
  WP HLQWXKP HQWGDWD WRUDJH

NOTE

0 RGLI\ WKHUHFRUGLQJLQWHUYDO WKRVHKLWRULFDOGDWDWRUHGLQLQWXKP HQW/LQYDOG
6REHRUHPRGI\LQJ UHFRUGLQJLQWHUYDO SOHDVHEDFNXSKLWRU GDWD

- **Automatic switching**

  $XWRP DWF VZLWFK WKH JURXSV RI WKH WHQG VFUHQV RU EDUJUDSK
  VFUHQ

- **Cold Junction Compensation (CJC)**

  &-& FDQ WXQHFRP SHQVDWRQ YDOXHRI WKHUP RFRXSOH

- **Default settings**

  5HWXRUHGHIDXOWVHWWQJV

4.4 INPUT CONFIGURATION

- **Type**

  6HWWQJ WKH WSHR WKHFKDQQHOV LQSXWLJQDO

- **Unit**

  6HWWQJ WKH XQLWR WKHFKDQQHOV LQSXWLJQDO

- **Range**

  6HWWQJ WKH RZ UDQJH DQG WKH KLJK UDQJHR WKHFKDQQHOV LQSXW VLJQDO

NOTE

- 7KHKLJK DQGRZ UDQJHVKRXOGRWEHWWKHVDPH
- 7KHRZ UDQJHLV DQGWKHKLJK UDQJHLV

7\SH	0 HDVXULQJ UDQJH	
P$	P$ VR	P$
9	9 VR	9
9	9 VR	9
P9	P9 VR	P9
P9	P9 VR	P9
3,	+] VR	+]
3W	° VR	°
&X	° VR	°
&X	° VR	°
&X	° VR	°
%$	° VR	°
%$	° VR	°
6	° VR	°
5	° VR	°
%	° VR	°
.	° VR	°
1	° VR	°
(	° VR	°
-	° VR	°
7	° VR	°
: 5(	° VR	°
: 5(	° VR	°
)	° VR	°
)	° VR	°
5HV	VR	
6LQ	6HWWQJ UDQJHDWZLOO	

- **Filter**

6KRZ YDOXH= / DVWYDOXH* ,QSXW/LOWHU+ &XUUHQWYDOXH
,QSXW/LOWHU+

- **Adjust**

$ COBRZ VKHXVHUDGMXVWVKHGHYLDWRQYDOXH YDOXH
PHDVXUHPHQWYDOXH N E

- **Alarm Config**

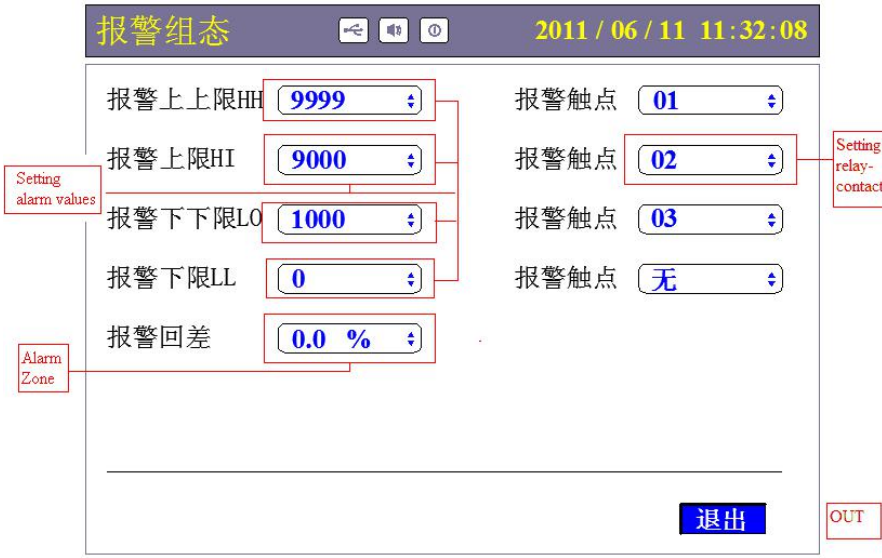

- 6HWWLQJ DODUP YDOXHV(++、 +,、 / 2、 / /)
7KHYDOXHVKRXOGEHLQVKHUDQJHRI FKDQQHOV
- 6HWWLQJ DODUP EDFNODVK RI VKUHVKROG(=RQH)
$YRLG UHOD\ IUHTXHQWO Z KHQ VKH YDOXH RI VLJQDO LV DURXQG
DODUP LQJ VKUHVKROG
- 6HWWLQJ UHOD\ FRQWDFW
: KHQ DODUP RFFXUV RXVSXWLWVR VKH UHOD\ Z LVK VHWWLQJ QXP EHU
: KHQ UHOD\ FRQWDFWLV VHWWR EH] HUR DODUP Z LOOQRWEH RXVSXWWR

WKLV UHDO : KHQ P XOWLSOH DODUP V DUH VHW WR EH RXWVLGH WKH VDP H UHDO DQ DODUP ZLOO P DNH WKLV UHDO RSHUDWH

- $ODUP FRQGLWLRQ DQG 8QGR $ODUP FRQGLWLRQ

7KUHVKROG WWSH	$ODUP FRQGLWLRQ	8QGR $ODUP FRQGLWLRQ
+LJK +LJK / LP LW	&KDQQHO YDOXH ! +LJK KLJK WKUHVKROG	&KDQQHO YDOXH +LJK KLJK WKUHVKROG EDFNDZK
+LJK / LP LW	&KDQQHO YDOXH ! +LJK WKUHVKROG	&KDQQHO YDOXH +LJK WKUHVKROG EDFNDZK
/ RZ / LP LW	&KDQQHO YDOXH / RZ WKUHVKROG	&KDQQHO YDOXH ! / RZ WKUHVKROG EDFNDZK
/ RZ / RZ / LP LW	&KDQQHO YDOXH / RZ OPZ WKUHVKROG	&KDQQHO YDOXH ! / RZ OPZ WKUHVKROG EDFNDZK

4.6 BACKUP DATA

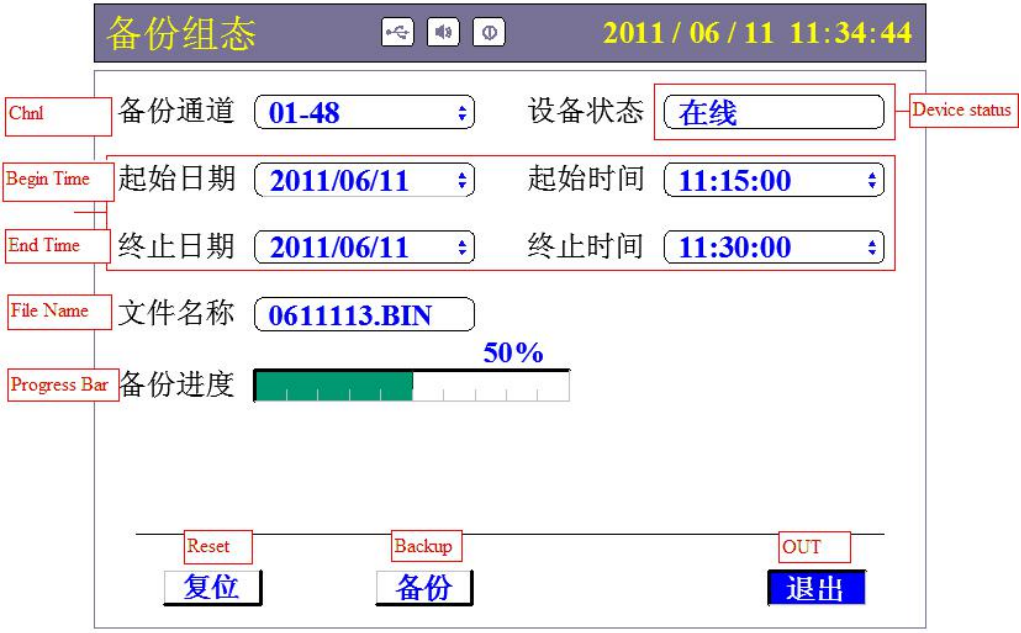

- **Device Status**

  6KRZ P RGHRI 8 GLVN RQOQH RII OQH IDXOWWDW FDQQRWGHWHFW 8 GLVN>RII OQH@HUURULQWKHEDFN SURFHWLQJ>IDXOW@

- **Begin/End time**

  %HJLQWLP H (QGWLP H<< 6\WHP WLP H

- **Progress bar**

  6KRZ WKHFXUUHQWSURJUHWRI WKHEDFNXS SURFHW

&+$37(5 27+(5 67$1'$5')81&7,216

● Construction

Item	Specification
' LPHQVLRQV	: î + î '
: HLJKW	$SSUR[. J

● Functions related to time

Item	Specification
&ORFN	5XQEHWZHHQ VHF
$FFXUDF\ RI FORFN	“ SSP VHF ℃ H[FOXGLQJ DGHDO RI VHFRQG PD[LPXP FDXVHG HDFK VWHS VWH SRZHULVVXLQHGRQ
&ORFNEDWWHU\ OLIH	$SSUR[\HDUV

● Standard Performance

Item	Specification
3RZHUVXSSO YROWDJH	9$&
3RZHUVXSSO IUHTXHQF\	+]
7HPSHUDWXUH	℃ VRU ℃
+XPLGLW\	VRU 5+
: DUP XS WLPH	$VWDQGDUG PLQXWHV
0 RXQWLQJ SRVLWLRQ	LQVLGH

● Power supply

Item	Specification
5DWGSRZHUVXSSOYROWDJH	9$&
$OORZDEOHYROWDJHUDQJH	9$&VR 9$&
5DWGSRZHUVXSSOIUHTXHQF\	+]
3RZHUFRQVXPSWLRQ	: RUGHVV

● Insulation

Item	Specification
*URXQGLQJUHVLVWDQFH	*URXQGLQJUHVLVWDQFH”

● Transport and Storage Conditions

Item	Specification
$PELHQWWHPSHUDWXUH	℃ VR ℃
$PELHQWKXPLGLW\	VR 5+

● Standard Capability

Item	Specification
'LVSOD\PHDVXULQJSUHFLVLRQ	1XPHULFDOYDOXHSUHFLVLRQ(QWHUPHDVXULQJUDQJHHUURU”)6 &XUYHSUHFLVLRQ)6